CONE

GENERAL

Name	Cone
Input Wattage	12W
Luminaire luminous flux	1080Lm
CCT	3000K 3500K 4000K 2700-6000K
CRI	>90
Voltage (V)	220-240V
Color	black, white, gun black, gold
IP Grade	IP44

Optical

Light beam angle	15°, 25°, 35°, 50°

Electrical

Driver	included
Dimming	on/off, TRIAC, 1-10V, DALI, T8

Other Data

Lifetime (hr)	50,000h
Dimension(mm)	76mm h-79
Materials of Housing	aluminium

Certifications

CE

RoHS

PICTURE

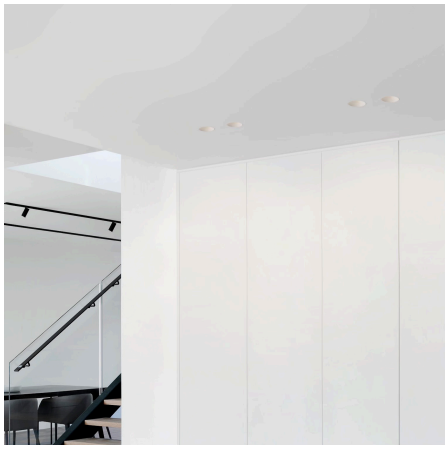

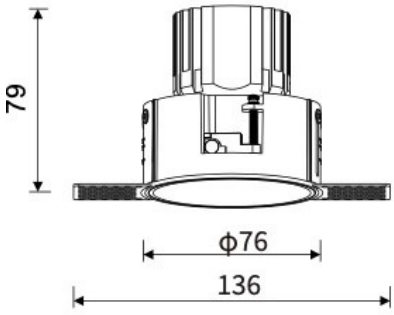

CUT:ϕ80mm

Application areas
It is designed for indoor, private, hospitality.

LIGHTORIA
LIGHT THAT INSPIRES